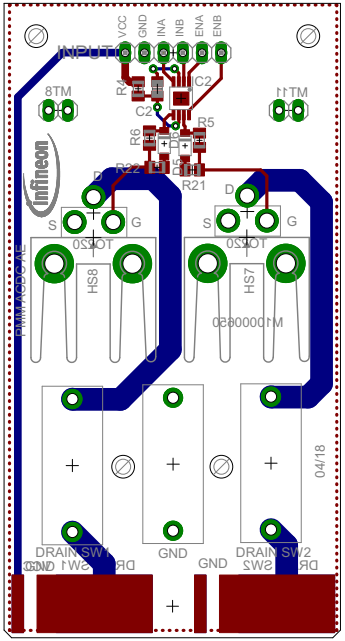

04.04.2018 17:36:18 C:\Users\MuMar\Desktop\Infineon Driver Demoboards\P10000930_KIT_DRIVER_2EDN7524R\P100(